Visual Representation Only - Not For Production Runs

Thermal Break - Not Provided

Equal Leg Block Frame - Provided

**600DSW**

Thermal Break - Provided

Equal Leg Frame - Provided

High Base Sill - Provided

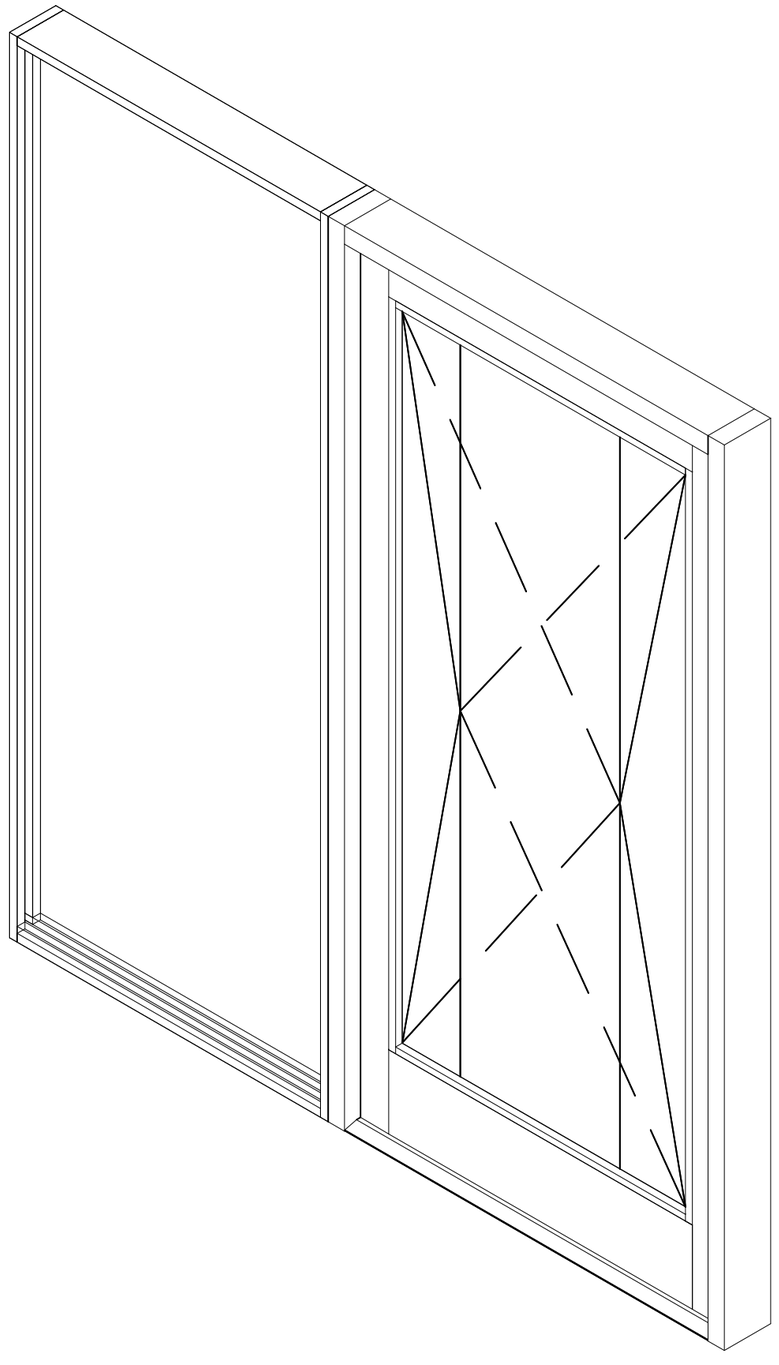

Visual Representation Only - Not For Production Runs

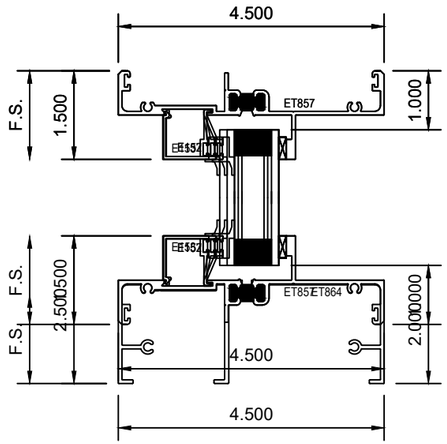


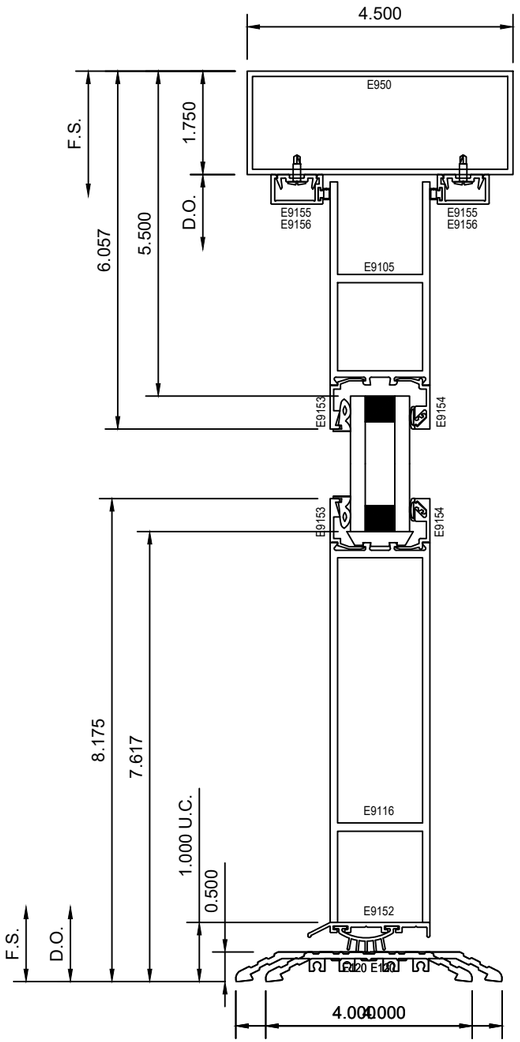


Series 980 Hinged Pivot Door (HPSO) - Medium Stile - Commercial Threshold w/ Fixed Window Sidelite On Left

Visual Representation Only - Not For Production Runs

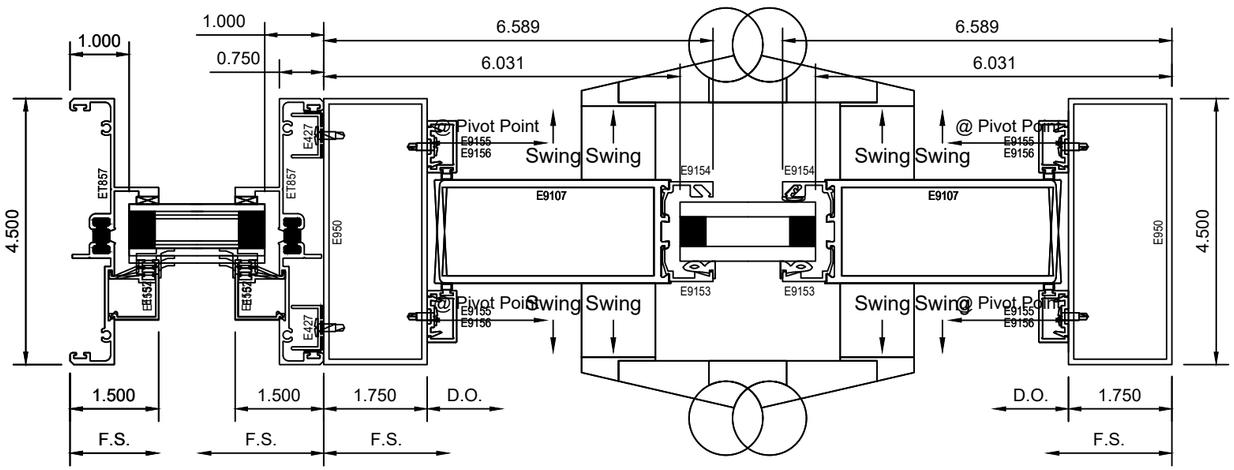


Series 980 Hinged Pivot Door (HPSD) - Medium Stile - Commercial Threshold w/ Fixed Window Sidelite On Left