Visual Representation Only - Not For Production Runs

Thermal Break - Not Provided

Equal Leg Block Frame - Provided

600DSW

Thermal Break - Provided

Equal Leg Frame - Provided

High Base Sill - Provided

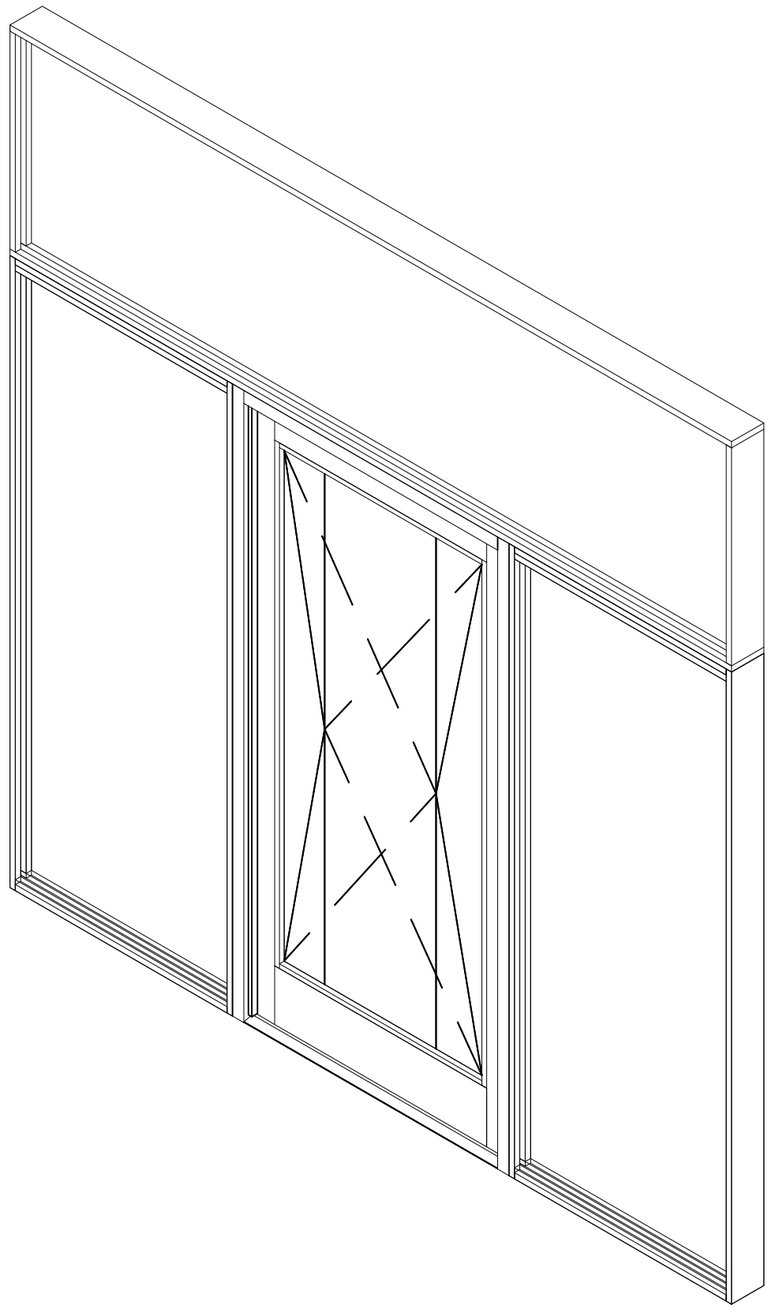

Visual Representation Only - Not For Production Runs

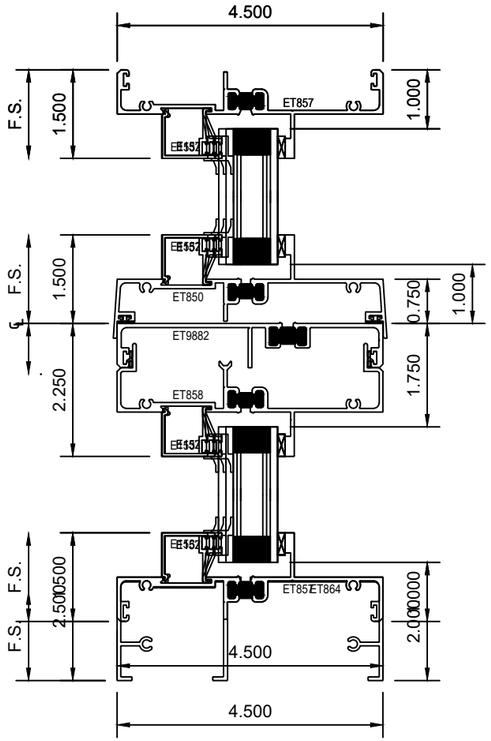

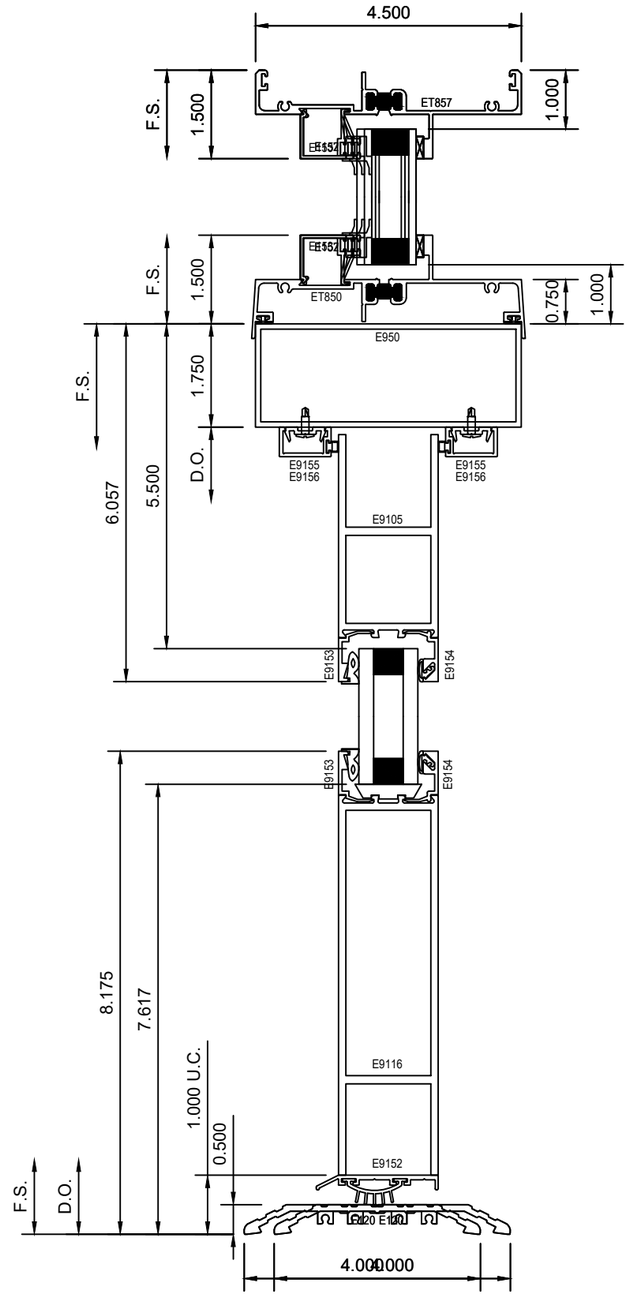

Series 980 Hinged Pivot Door (HP90) - Medium Stile - Commercial Threshold w/ Fixed Window Sidelites And Fixed Window Transom

Visual Representation Only - Not For Production Runs

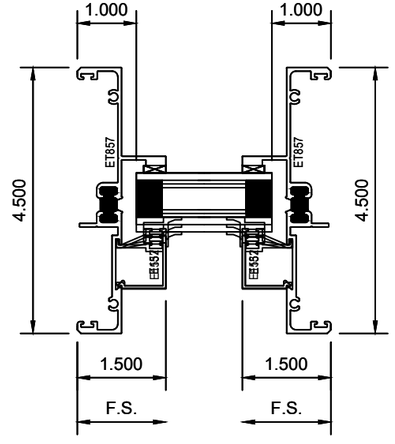

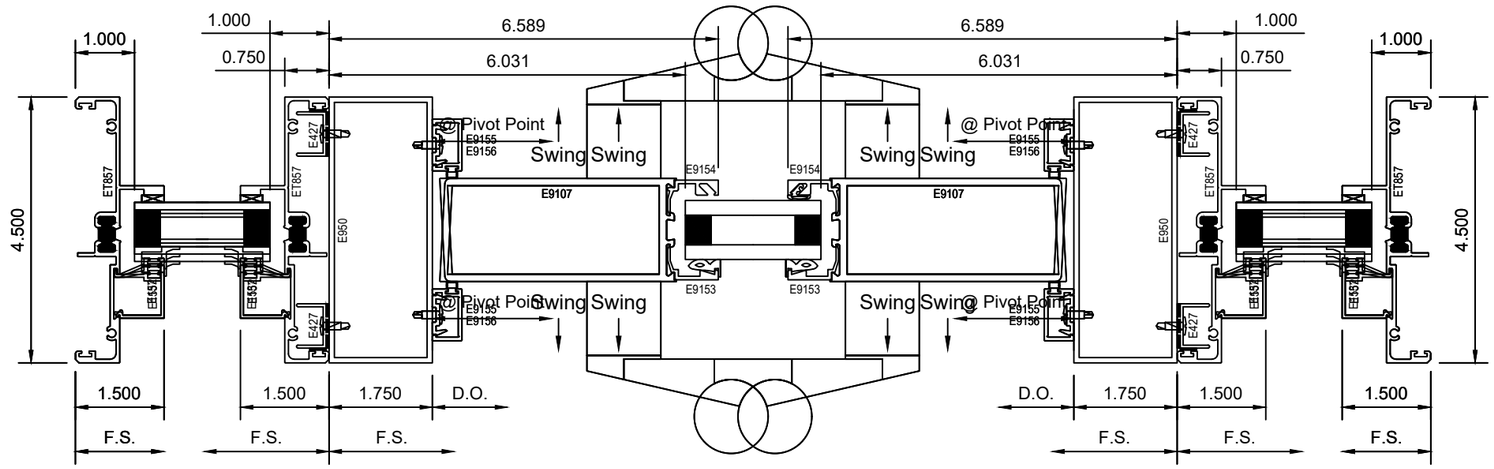

Series 980 Hinged Pivot Door (HPSD) - Medium Stile - Commercial Threshold w/ Fixed Window Sidelites And Fixed Window Transom