Visual Representation Only - Not For Production Runs

Thermal Break - Provided

Equal Leg Frame - Provided

High Base Sill - Provided

Drip Cap - Provided

Note: Drip Cap Only

Applicable to Nail-fin Option.

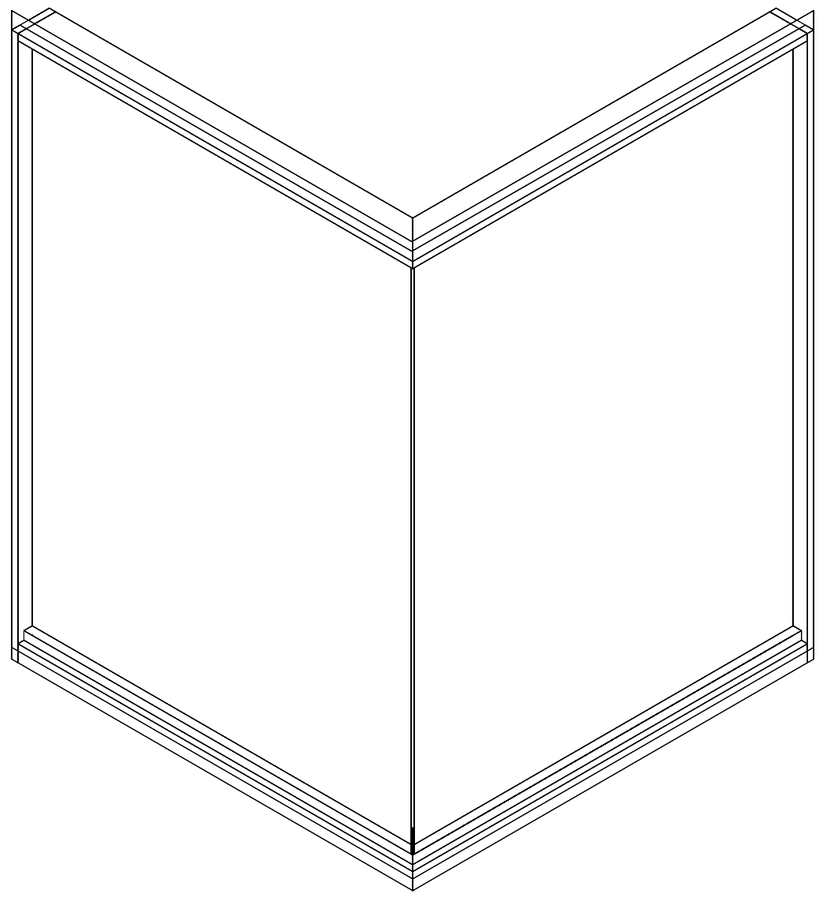

Visual Representation Only - Not For Production Runs

Note: Drip Cap Only

Applicable to Nail-fin Option.

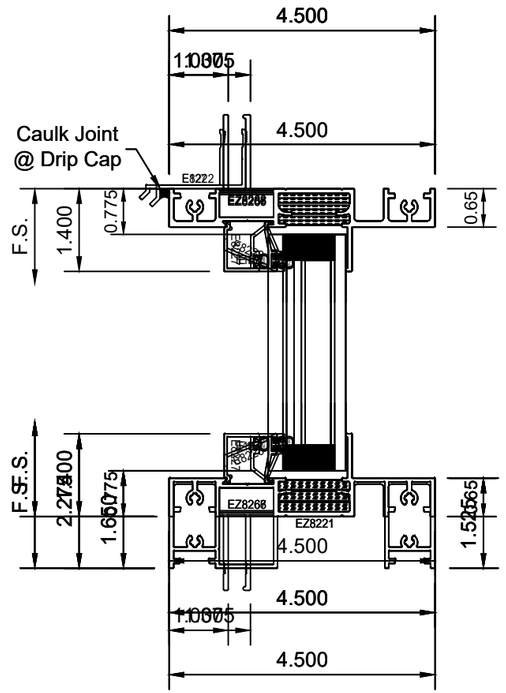

Visual Representation Only - Not For Production Runs

