Visual Representation Only - Not For Production Runs

Thermal Break - Provided

Nail Fin Frame - Provided

Equal Legal Frame - Provided

High Base Sill - Provided

Screen - Provided

Drip Cap - Provided

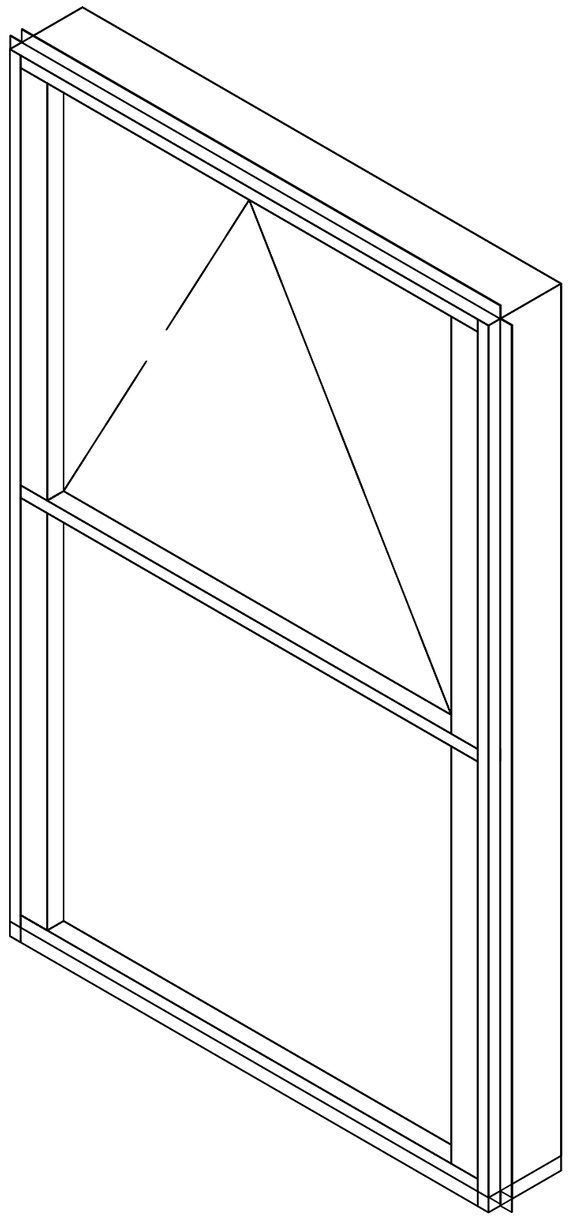

Note: Drip Cap Only

Applicable to Nail-fin Option.

Visual Representation Only - Not For Production Runs

Note: Drip Cap Only

Applicable to Nail-fin Option.

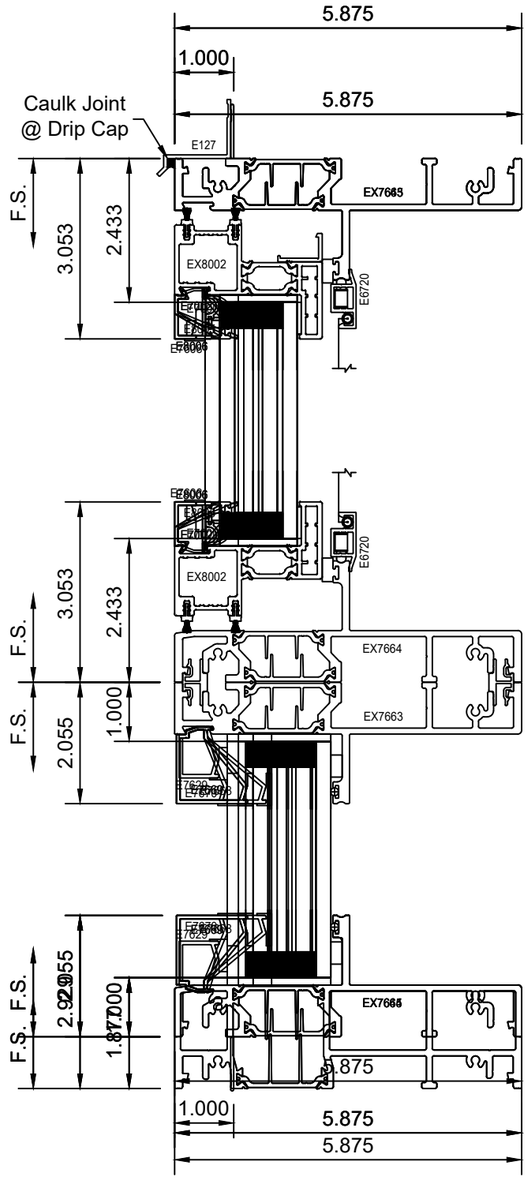

Series 7660 Hinged Awning Window - Hinged Awning Over 7675 Fixed Window

Visual Representation Only - Not For Production Runs

