Visual Representation Only - Not For Production Runs

Thermal Break - Provided

2.5" Hi-Leg Water Barrier Threshold - Provided

Flush Handle - Provided

1.81" Diameter Rollers - Provided

Equal Frame - Provided

Screens - Not Provided

Sill Riser - Provided

Note: Screens are not available when Sill Riser is selected.

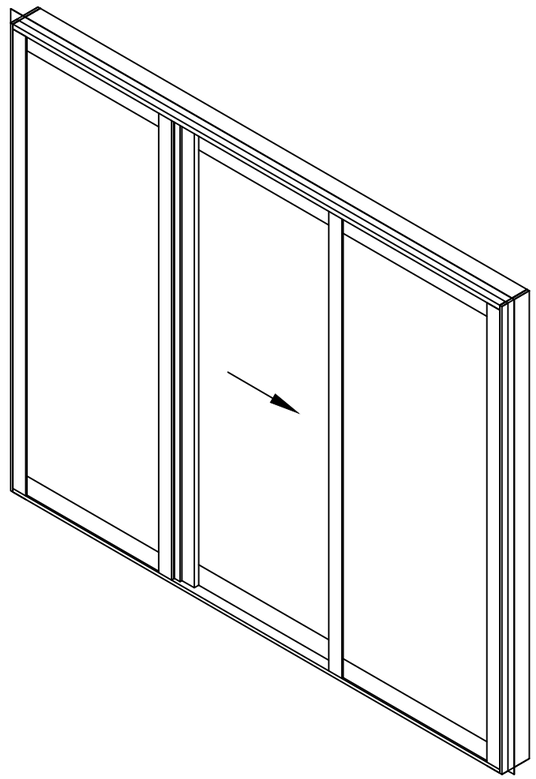

Visual Representation Only - Not For Production Runs

Note: Screens are not available when Sill Riser is selected.

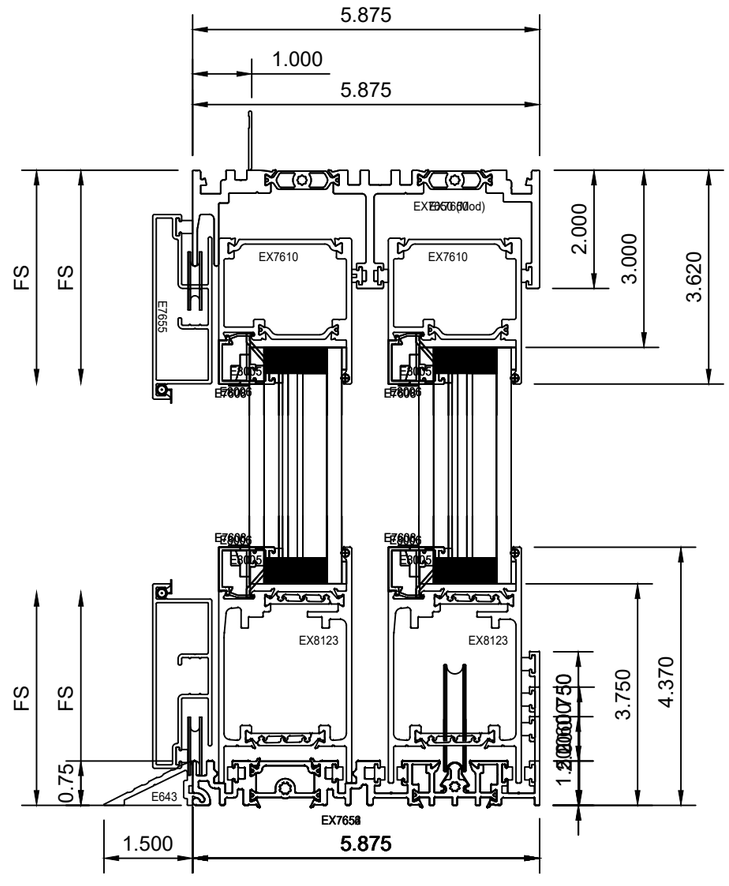

Visual Representation Only - Not For Production Runs

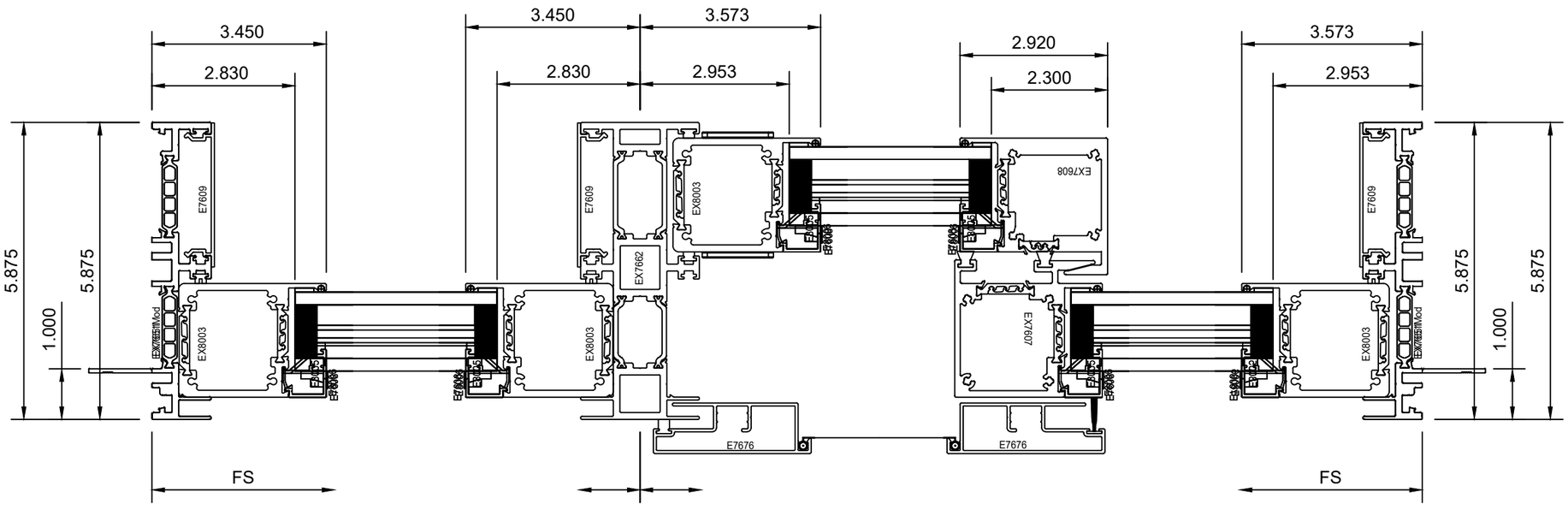

Series 7650 Sliding Glass Door - (OXOR)