Visual Representation Only - Not For Production Runs

Thermal Break - Provided

Nail-Fin Frame - Provided

Equal Legs - Provided

High Base Sill - Provided

Drip Cap - Provided

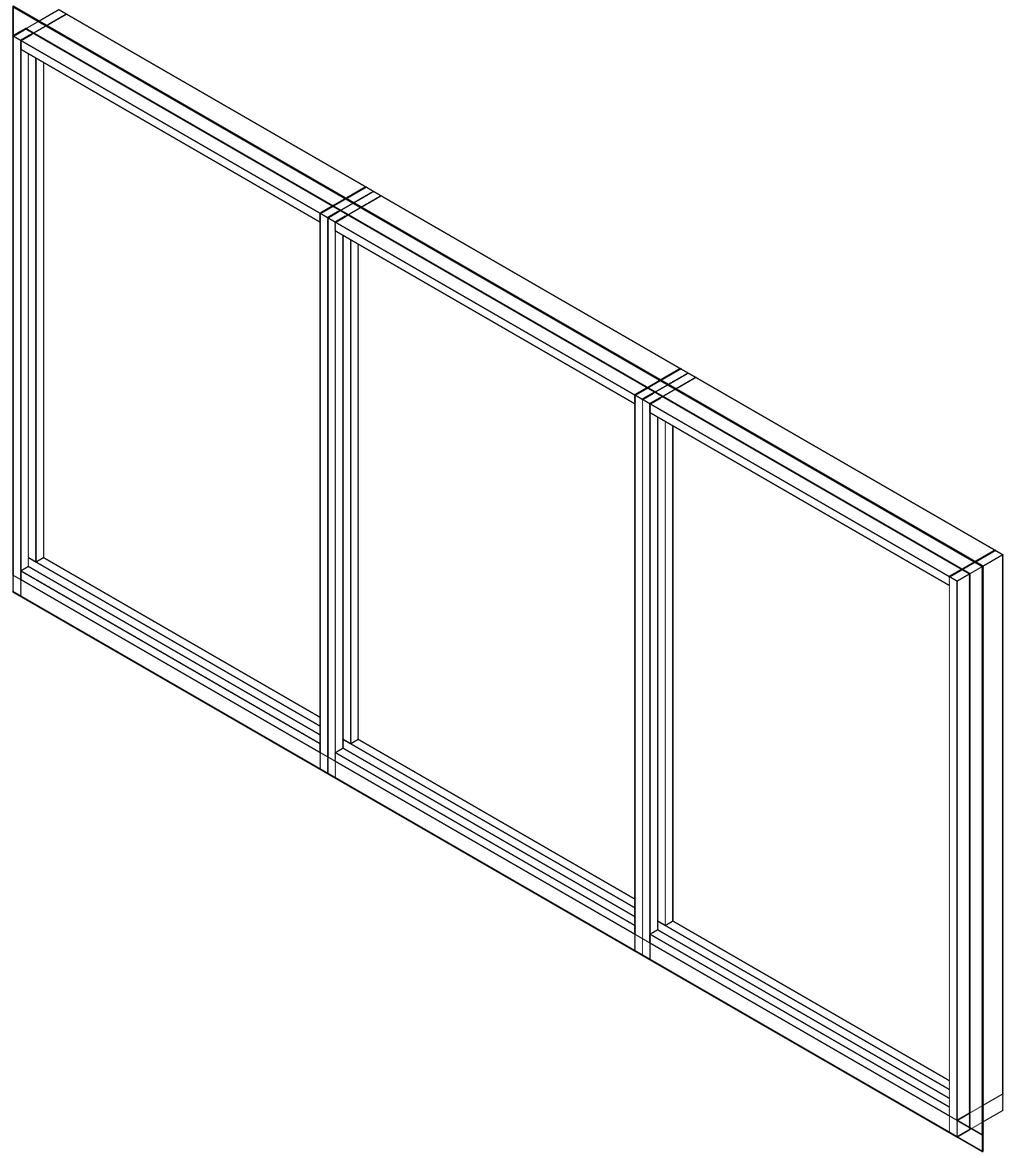

Note: Drip Cap Only

Applicable to Nail-fin Option.

Series 7630 Direct Set Window - Triple Horizontal Stack (3-O)

Visual Representation Only - Not For Production Runs

Note: Drip Cap Only

Applicable to Nail-fin Option.

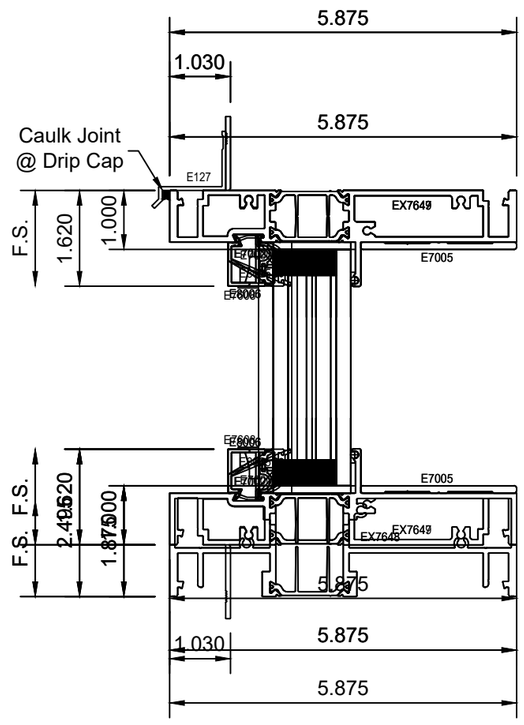

Visual Representation Only - Not For Production Runs

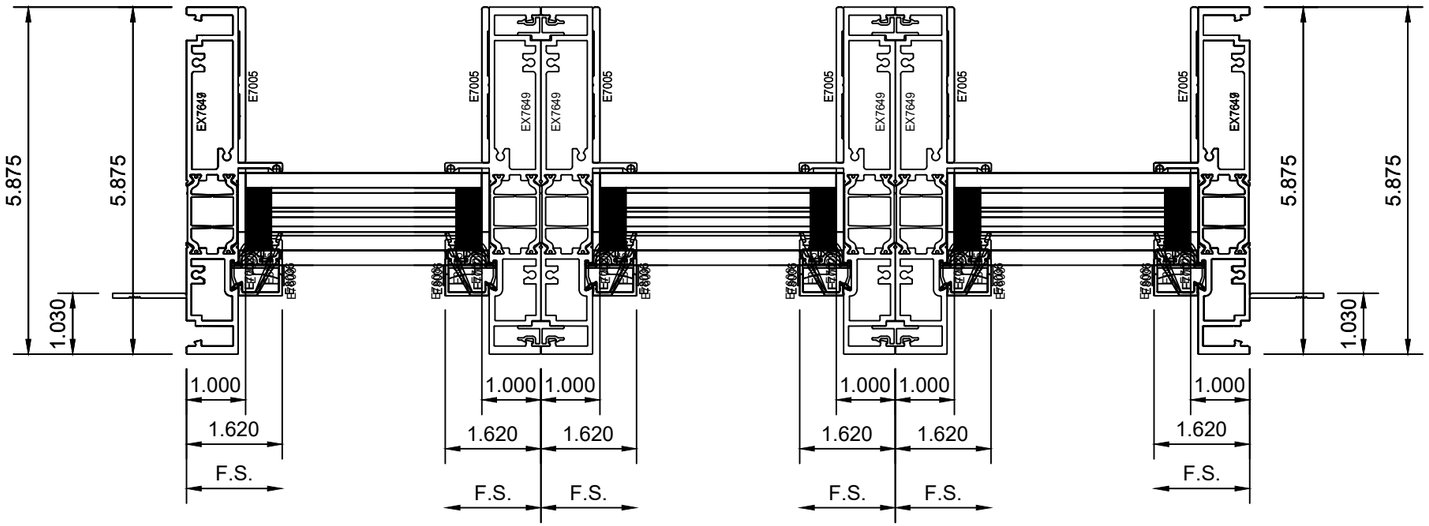

Series 7630 Direct Set Window - Triple Horizontal Stack (3-O)