Visual Representation Only - Not For Production Runs

Thermal Break - Provided

Screen - Provided

Equal Legs Block - Provided

Nail Fin Frame - Provided

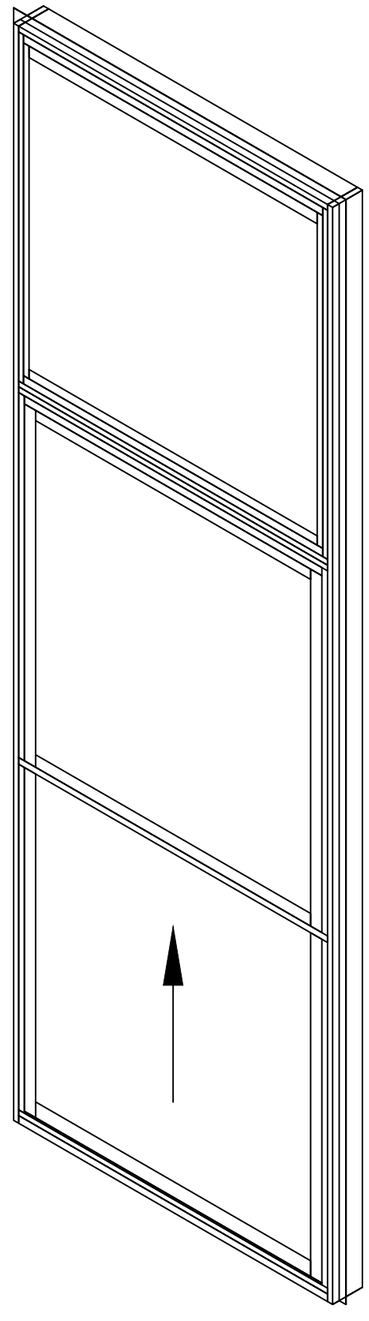

Series 610 Single Hung Window - Direct Set Over Single Hung (SH^O)

Visual Representation Only - Not For Production Runs

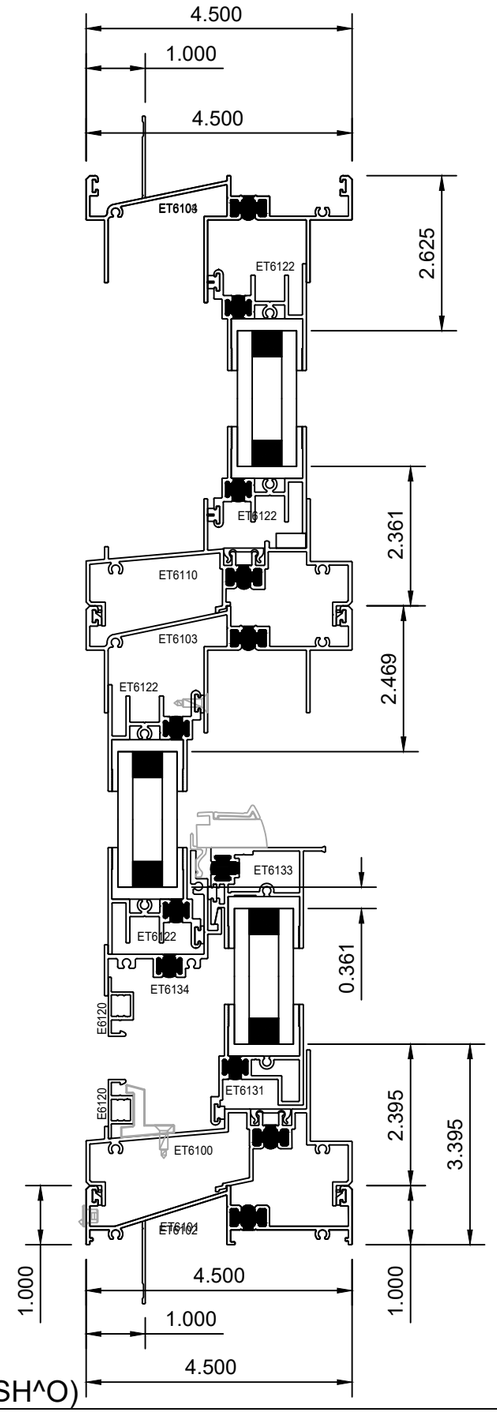

Series 610 Single Hung Window - Direct Set Over Single Hung (SH^O)

Visual Representation Only - Not For Production Runs

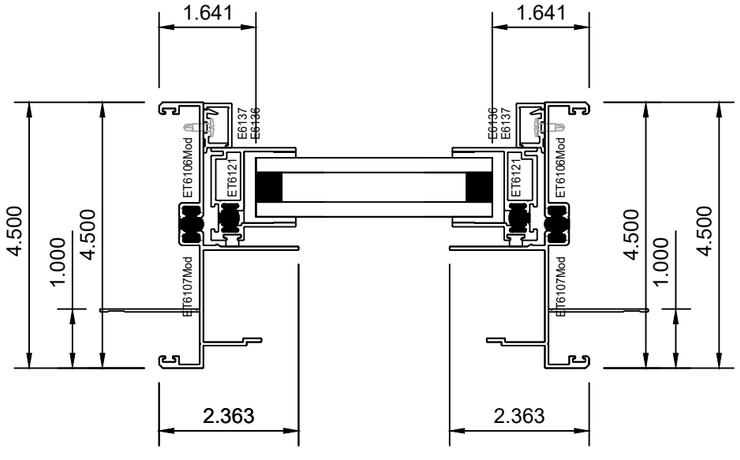

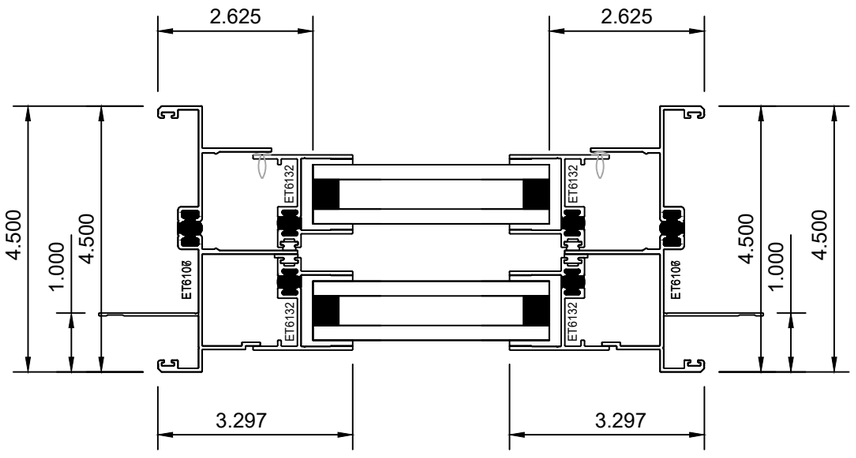

Series 610 Single Hung Window - Direct Set Over Single Hung (SH^O)