Visual Representation Only - Not For Production Runs

Thermal Break - Provided

1.75" Threshold - Provided

Customer Handle - Provided

1.80" Diameter Rollers - Provided

Equal Frame - Provided

Screens - Not Provided

Thermal Locksticks - Provided

Drip Cap - Provided

Note: Drip Cap Only

Applicable to Nail-fin Option.

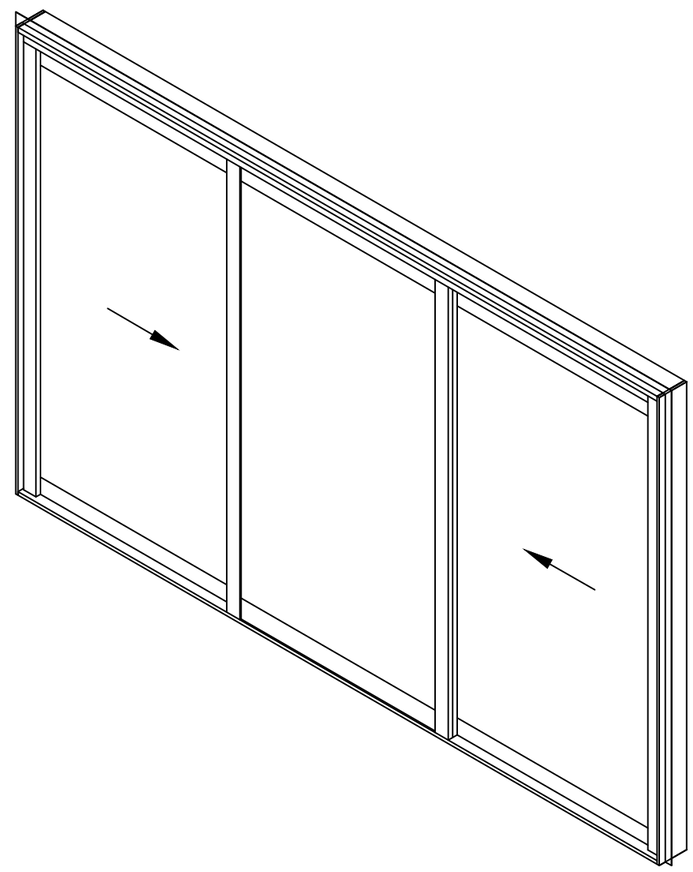

Series 600 Sliding Glass Door - (XOX)

Visual Representation Only - Not For Production Runs

Note: Drip Cap Only
Applicable to Nail-fin Option.

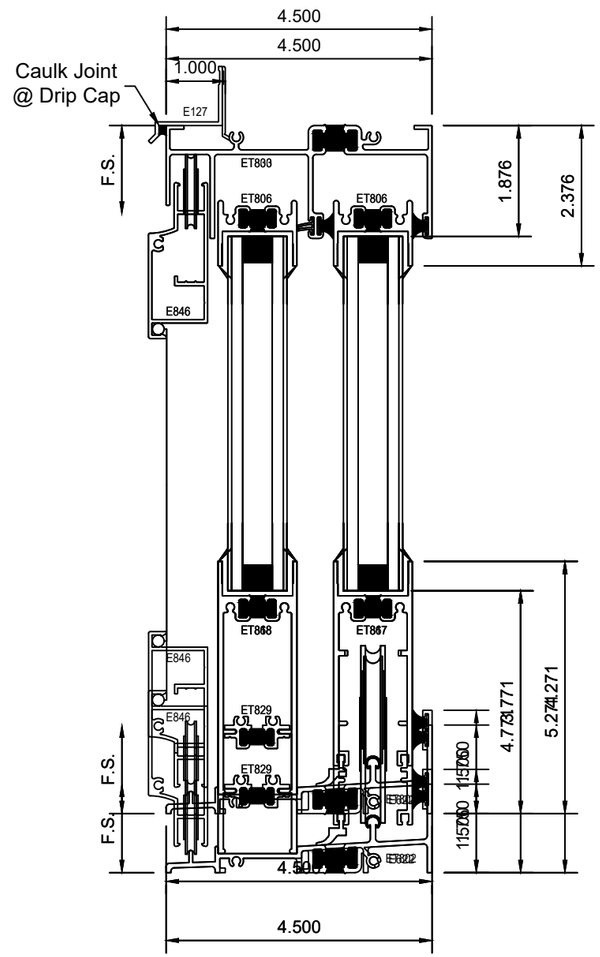

Series 600 Sliding Glass Door - (XOX)

Visual Representation Only - Not For Production Runs

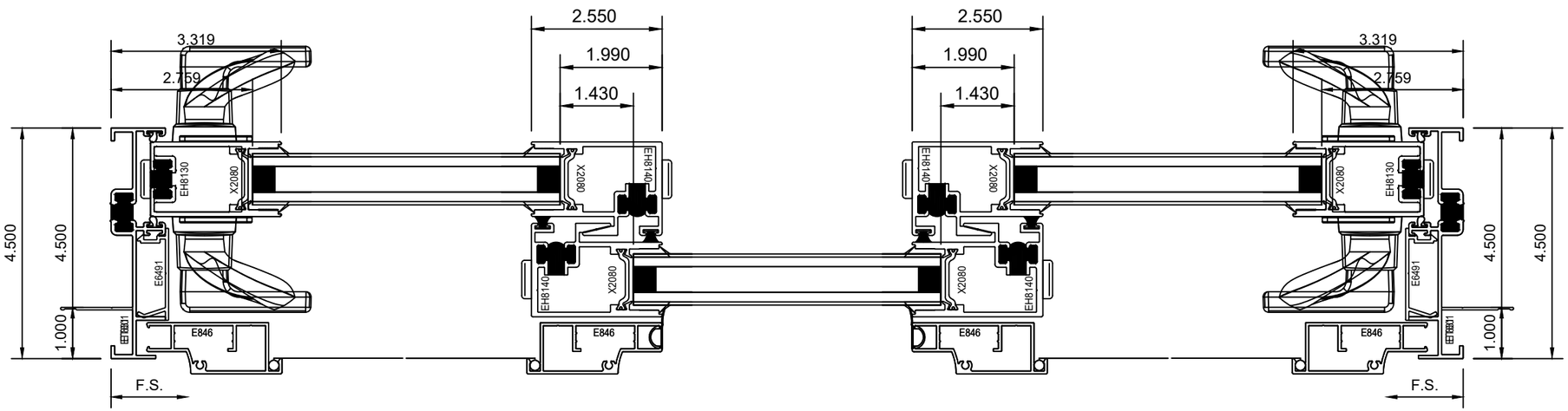

Series 600 Sliding Glass Door - (XOX)