Visual Representation Only - Not For Production Runs

Thermal Break - Provided

1.75" Threshold - Provided

Customer Handle - Provided

1.80" Diameter Rollers - Provided

Nail-Fin Frame - Provided

Screens - Not Provided

Non-Thermal Locks - Provided

Drip Cap - Provided

Note: Drip Cap Only

Applicable to Nail-fin Option.

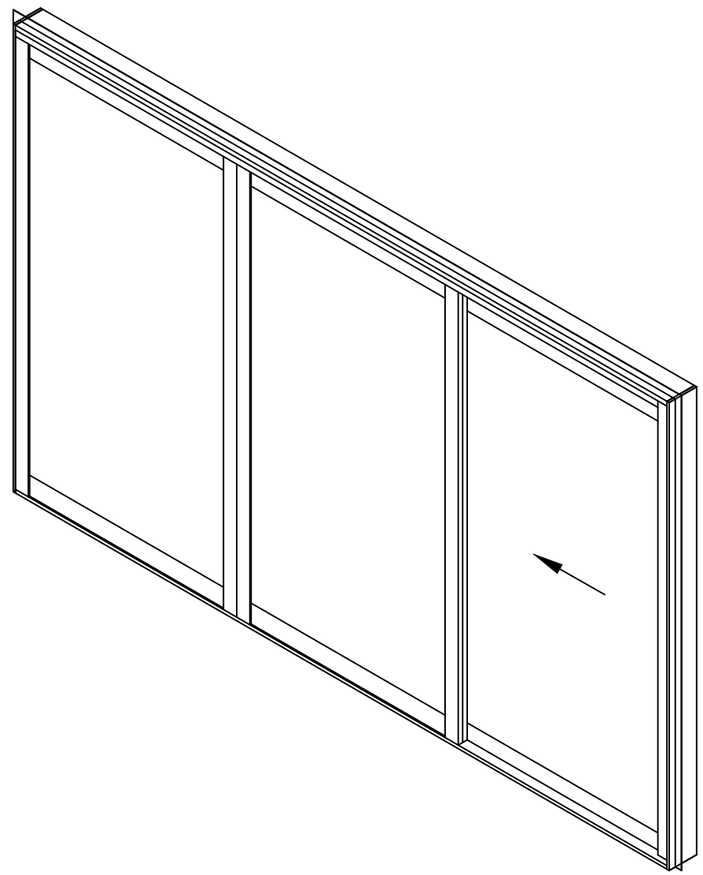

Series 600 Sliding Glass Door - (OOX)

Visual Representation Only - Not For Production Runs

Note: Drip Cap Only
Applicable to Nail-fin Option.

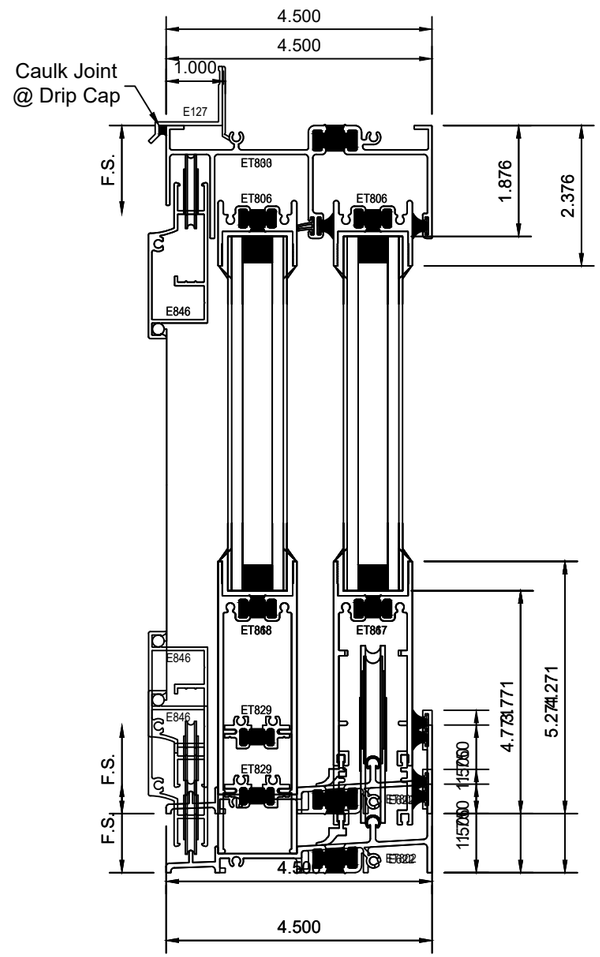

Series 600 Sliding Glass Door - (OOX)

Visual Representation Only - Not For Production Runs

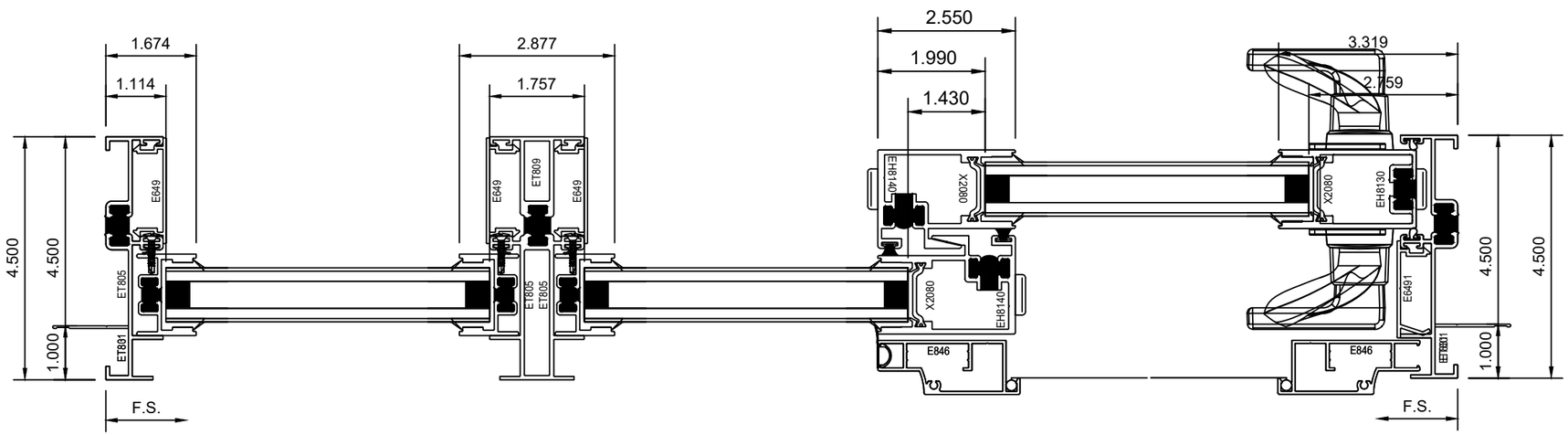

Series 600 Sliding Glass Door - (OOX)