Visual Representation Only - Not For Production Runs

Non - Thermal Break - Provided

Nail Fin Frame Provided

Equal Legs Frame Provided

High Base Sill - Provided

Drip Cap - Provided

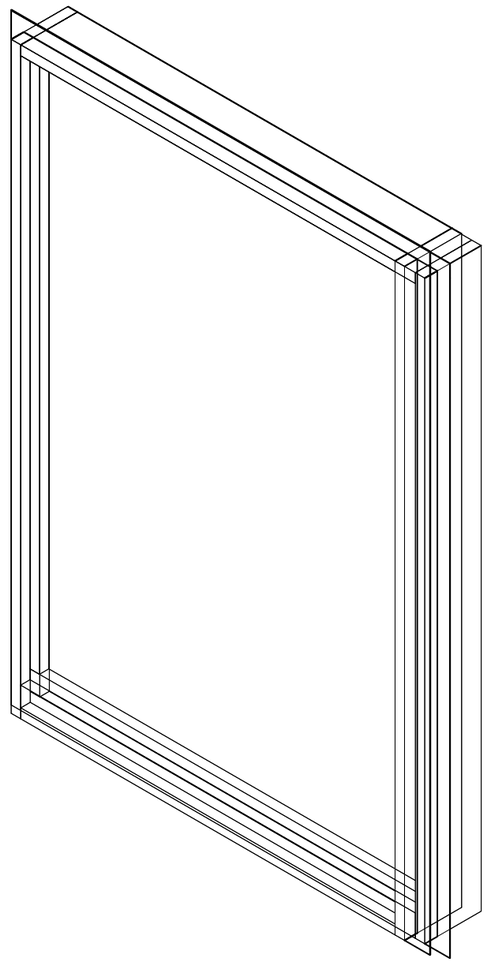

Note: Drip Cap Only

Applicable to Nail-fin Option.

Visual Representation Only - Not For Production Runs

Note: Drip Cap Only

Applicable to Nail-fin Option.

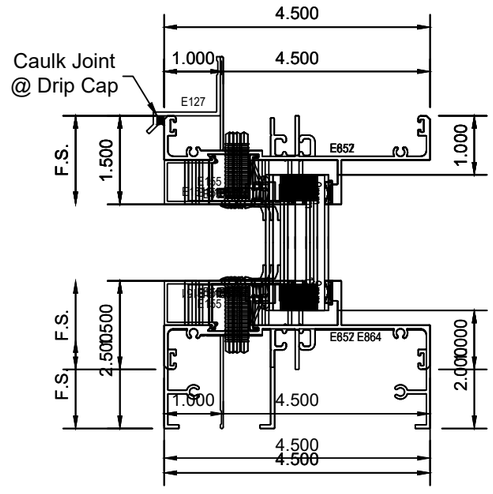

Visual Representation Only - Not For Production Runs

